Analytical Cume--April 3, 1993

1. Bipotentiostat Schematic Diagram

On the page at the end of this cume is the schematic diagram of a bipotentiostat. A bipotentiostat allows simultaneous and independent control of two working (or generating) electrodes while using only one reference electrode and one counter (or auxilliary) electrode. (The bipotentiostatic circuit is a slight modification of the simpler potentiostatic circuit).

Below are the definitions of the symbols in the diagram:

resistor, R

operational amplifier

booster (This element helps to boost the current for high current applications. To avoid confusion in this exam, you may replace the booster with a wire.)

ground, e = 0 V

electrochemical cell with counter, reference, and two working electrodes

counter (or auxilliary) electrode

reference electrode

working (or generating) electrode

e = potential
i = current
R = resistance

In the schematic diagram, a non-zero potential, e_1 vs. ground, is applied at the upper left operational amplifier and a non-zero potential e_2 vs. ground is applied at the upper right operational amplifier. A current i_1 flows through the left working electrode and a current i_2 flows through the right working electrode. Refer to the schematic diagram in answering the following questions.

Express the following in terms of $\mathbf{e_1}$ and/or $\mathbf{e_2}$ and/or **actual values** (if known):

Example #1: potential at point A vs. ground, $e_A = 0$

Example #2: potential at point B vs. ground, $e_B = -e_1$

(3 pts.) (a) potential at point C vs. ground, $e_C =$ _____

(3 pts.) (b) potential at point D vs. ground, $e_D =$ _____

(5 pts.) (c) potential at point F vs. ground, $e_F =$ _____

(15 pts.) (d) potential at point G vs. ground, $e_G =$ _____

(3 pts.) (e) potential at point J vs. ground, $e_J =$ _____

Express the following in any combination of terms $\mathbf{i_1}$, $\mathbf{i_2}$, $\mathbf{R_C}$, $\mathbf{R_1}$, $\mathbf{R_2}$, $\mathbf{R_Z}$, and /or $\mathbf{R_i}$

Example #1: potential at point E vs. ground, $e_E = -i_1R_1$

(5 pts.) (f) potential at point I vs. the potential at point H, $e_{I\ vs.\ H} =$ _____

Express the following in terms of i_1 and/or i_2

(6 pts.) (g) the current i_B = _____

The answers to questions a-e are potentials that are relative to the ground potential. When we think about performing electrochemical experiments, however, we think in terms of setting the potentials of the working electrodes relative to the potential of the reference electrode. If you can answer the following questions then you know the potentials of the working electrodes relative to the reference electrode.

(5 pts.) (h) potential at point D vs. the reference electrode potential = _____

(5 pts.) (i) potential at point J vs. the reference electrode potential = _____

2. Electrogenerated Chemiluminescence (**ECL**):

Electrochemistry is well-suited to studies of radical ions in solution, since radical ions can be easily generated through oxidation or reduction of the stable precursors. For example in the case of solutions of pyrene (**P**) or tetramethylene-*p*-phenylenediamine (**TMPD**):

Reduction of pyrene: $P + e^- \longrightarrow P^{\cdot -}$

Oxidation of TMPD: $TMPD \longrightarrow TMPD^{\cdot +} + e^-$

Electron transfer between radical ions in solution sometimes results in chemiluminescence. For example, in a mixture of TMPD and P where $TMPD^{\cdot +}$ and $P^{\cdot -}$ are being generated:

$$x\,TMPD^{\cdot +} + x\,P^{\cdot -} \xrightarrow{k} x\,TMPD + x\,P + y\,h\nu \qquad (1)$$

Although the light from these reactions almost always comes from reactions in solution, the reactants are generated electrolytically, and thus the name *electrogenerated chemiluminescence* (ECL) is used to describe the phenomenon.

There are several electrochemical methods with which to generate ECL. One is to make use of a bipotentiostat and a rotating ring-disk electrode (**RRDE**) to generate one species (e.g. $TMPD^{\cdot +}$) at the disk electrode and the other species (e.g. $P^{\cdot -}$) at the ring electrode and to monitor with a photomultiplier tube (PMT) the light that is emitted when these two species react with each other. (Note that in this *dual-electrode* apparatus, the disk is one working electrode and the ring is the other working electrode. Elsewhere in the solution, and not of concern here, are a counter electrode and reference electrode.)

(8 pts) **(a)** Given a starting mixture of both TMPD and pyrene (P) and the following reduction potentials, at what potentials vs. SCE (or in what potential regions) must the disk and ring be held to generate ECL?

$P + e^- \longrightarrow P^{\cdot -}$ ..... $E^{o'}$ = -2.10 V vs. SCE

$TMPD^{\cdot +} + e^- \longrightarrow TMPD$ ..... $E^{o'}$ = 0.50 V vs. SCE

(8 pts.) **(b)** Consider the fact that an RRDE brings solution to the disk electrode by the convection that results from rotating the ring/disk assembly. The solution then flows adjacent to the plane of the disk and ring and moves radially away from the disk, passing uniformly across the ring. (A wall jet would have relatively the same effect.) Draw a diagram of an RRDE and show spatially where you would expect to see the chemiluminescence that is created in an ECL experiment. Explain qualitatively how the location and spread of the chemiluminescence zone would change as a function of the rate constant, *k*, of the electron transfer reaction.

(10 pts.) **(c)** Assume that the gap between the disk and ring is **2 mm** wide and the diffusion coefficients of the species that are generated at the disk and ring are both **1 x 10^{-6} cm^2/s**. Quantitatively show why for these typical parameters it is impractical to use a **stationary** ring/disk assembly. To answer this question, use Einstein's equation below, where **D** is the diffusion coefficient of a species and **t** is the time it takes for the species to travel a distance **x**.

$$D = x^2 / (2\,t)$$

(10 pts.) **(d)** It is not always practical to use a wall jet or rotating ring/disk assembly with viscous or small samples. Suggest an electrochemical method that would generate ECL using only **one, stationary** working electrode.

(14 pts.) **(e)** Wightman and coworkers recently reported a dual-electrode ECL experiment at a microelectrode array in stationary solutions [Bartlet, J. E.; Drew, S. M.; Wightman, R. M. *J. Electrochem. Soc.* **139**, 70, (1992)]. The microelectrode array consisted of individually-addressable band electrodes that were 4 microns wide, separated by 4 micron gaps. **First,** draw a diagram of two parallel microband electrodes and show spatially where you would expect to see the chemiluminescence that is created in such an ECL experiment for **(i)** when the diffusion coefficients for the oxidized species and the reduced species are the same, and **(ii)** when the diffusion coefficient for the oxidized species is one tenth that of the reduced species . **Second,** give **two** reasons why convection is not necessary with this electrode configuration.
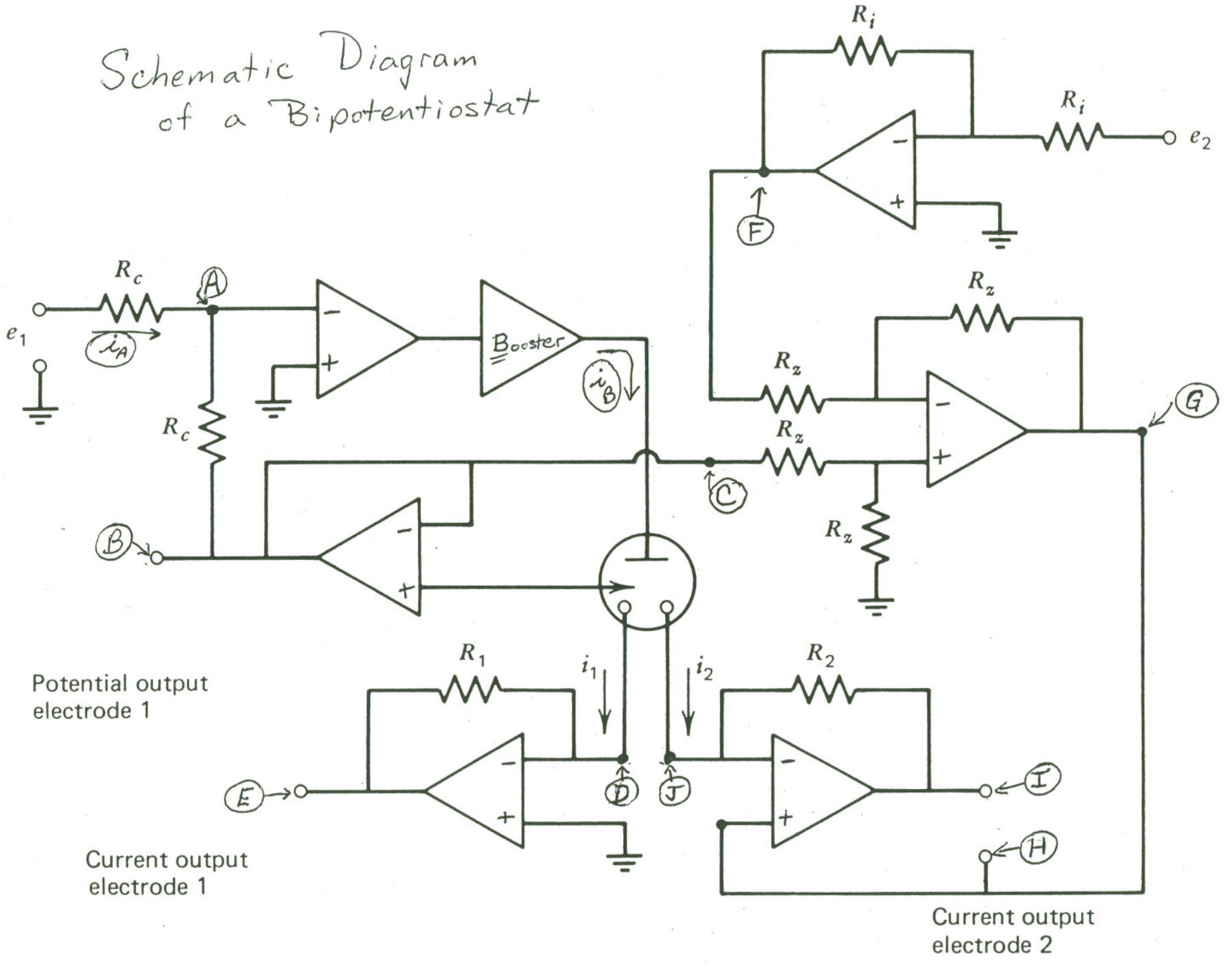
Schematic Diagram of a Bipotentiostat